TK - 208 / 308 SIMPLE PROGARMMING

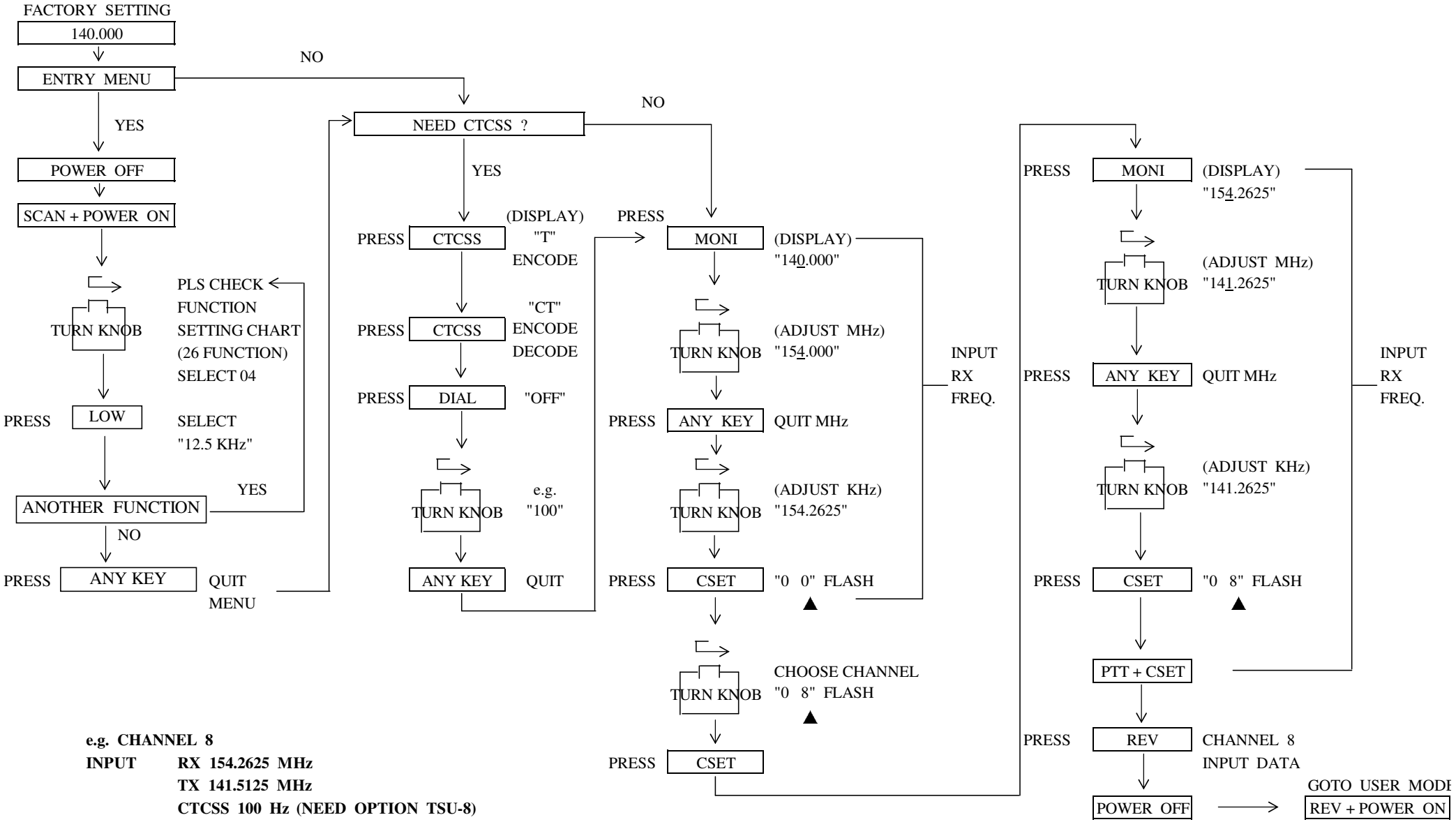

e.g. CHANNEL 8
INPUT RX 154.2625 MHz
TX 141.5125 MHz
CTCSS 100 Hz (NEED OPTION TSU-8)

E